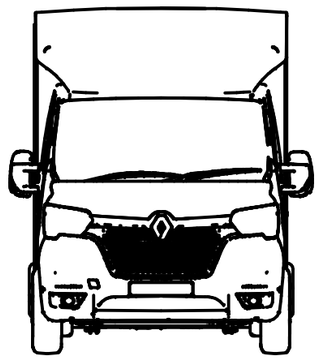

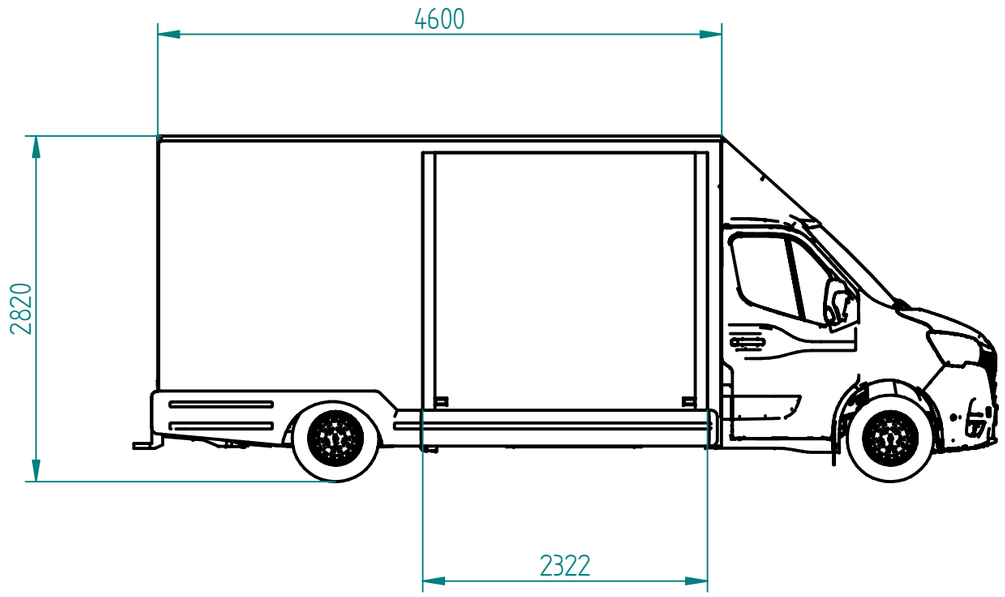

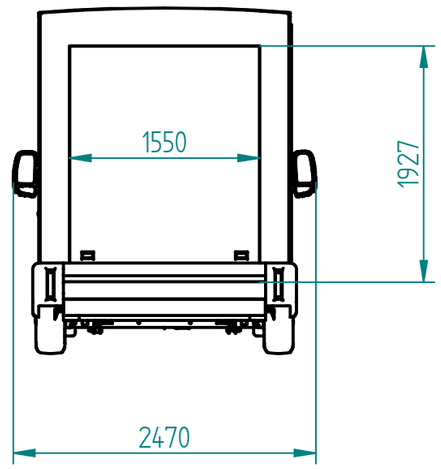

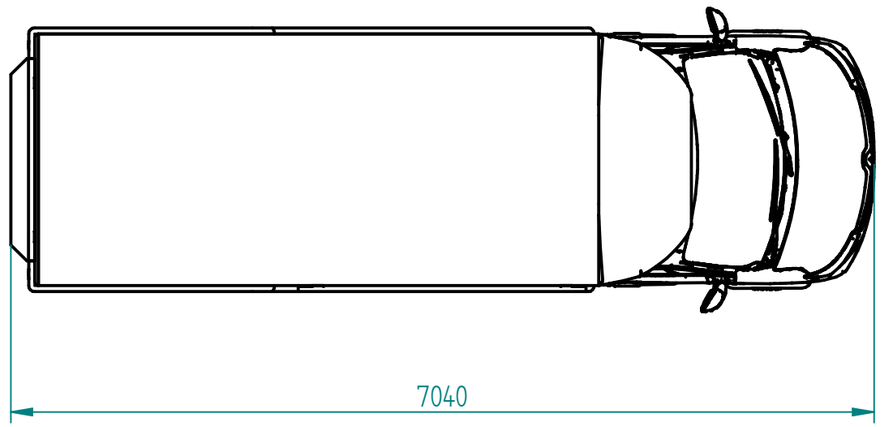

	NAME	DATE
DRAWN	Johan L.	02/09/21

UNLESS OTHERWISE SPECIFIED
DIMENSIONS ARE IN MILLIMETERS
ANGLES ±X.X°

EVENT TRAILER SERVICES

SIZE	TITLE	
A3	Promowheels Standard	
SCALE:	WEIGHT:	SHEET 1 OF 2

Overview

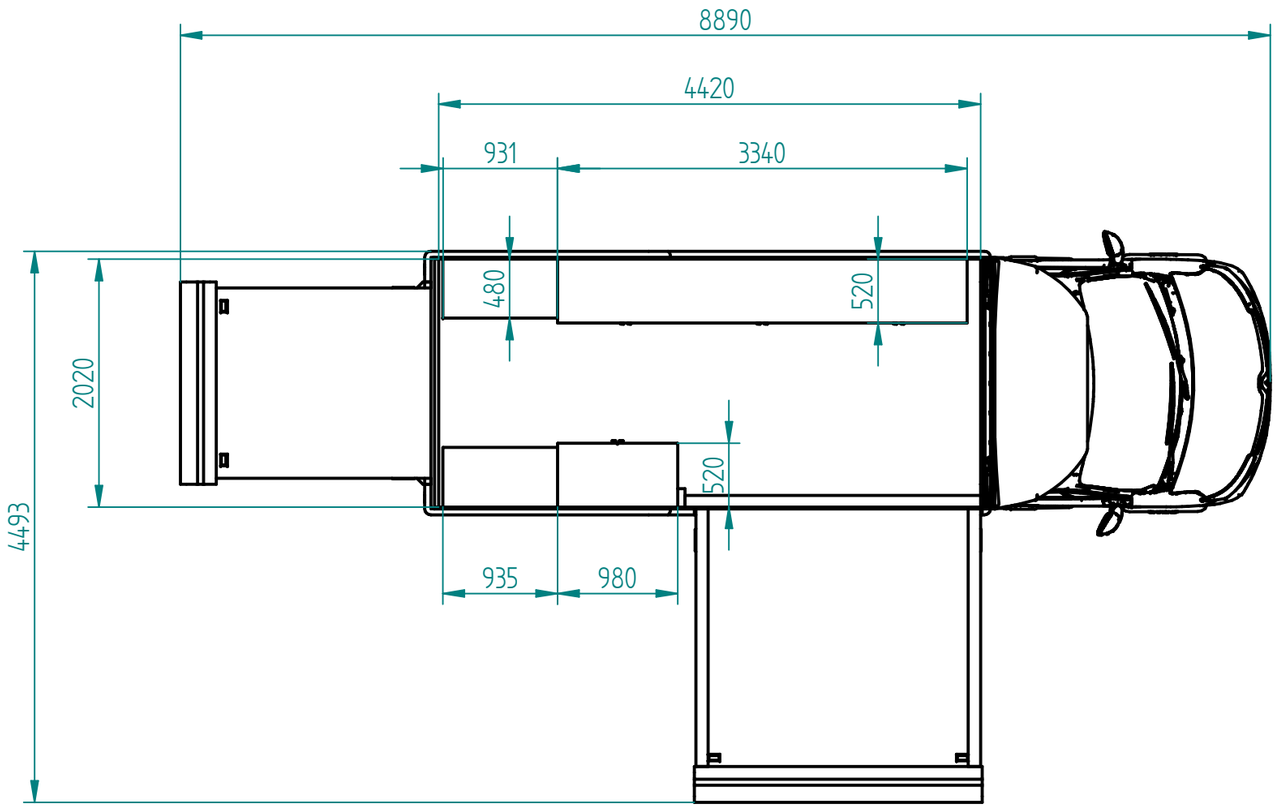

Interior

	NAME	DATE
DRAWN	Johan L.	02/09/21

UNLESS OTHERWISE SPECIFIED
DIMENSIONS ARE IN MILLIMETERS
ANGLES ±X.X°

EVENT TRAILER SERVICES

SIZE	TITLE	
A3	Promowheels Standard	

SCALE:	WEIGHT:	SHEET 2 OF 2